TABLE 1

DASH NO	CABLES ACCOMMODATED	A DIM	B DIM	C FLATS	D FLATS	E DIA	CABLE ENTRY DIA	ASSEMBLE PER	CABLE TYPE
-7	TRC-50-2, MI7/134-00001 TRC-75-2	1.135	.096	.438	.438	.500	.274	TAI-189	TRIAX
-8	8227, BELDEN	1.716	.130	.625	.688	.750	.345	TAI-103	TWINAX
-9	TWC-78-2 TWC-124-2, MI7/45-RG 308	1.135	.096	.438	.438	.500	.285	TAI-102	TWINAX
-A9	BL782, TIMES BL982, TIMES BL1242, TIMES	1.135	3	3	.438	.500	.285	TAI-102	TWINAX
-10	RG-22 754E, AT&T	1.716	.130	.625	.688	.750	.455	TAI-103	TWINAX
-11	760A, AT&T	1.716	.130	.625	.688	.750	.345	TAI-103	TWINAX
-12	16PEVL, AT&T VI-AL, GENERAL	1.716	.130	.625	.688	.750	.485	TAI-128	TWINAX
-13	TRF-59, TIMES	1.716	.130	.625	.688	.750	.362	TAI-129	TRIAX
-13A	8232, BELDEN	1.716	.130	.625	.688	.750	.352	TAI-165	TRIAX
-14	8233, BELDEN	1.716	.130	.625	.688	.750	.510	TAI-129	TRIAX
-23	250-3884, MICRODOT	1.135	.096	.438	.438	.500	.183	TAI-189	TRIAX
-24	202-3934, MICRODOT	1.135	.096	.438	.438	.500	.191	TAI-102	TWINAX
-24A	9530A5117, RAYCHEM	1.135	.096	.438	.438	.500	.200	TAI-189	TRIAX
-25	T-43M, GENERAL	1.135	.096	.438	.438	.500	.285	TAI-102	TWINAX
-25A	5021H5331, RAYCHEM	1.135	.096	.438	.438	.500	.285	TAI-189	TRIAX
-26	7028A5518, RAYCHEM	1.135	.096	.438	.438	.500	.183	TAI-189	TRIAX
-27	T19TPSJ2619EN, WOVEN 202-3927, MICRODOT 202-3942, MICRODOT	1.135	.096	.438	.438	.500	.145	TAI-102	TWINAX
-29	TWC-78-1/TWC-124-1A	1.135	.096	.438	.438	.500	.191	TAI-102	TWINAX
-30	761A, AT&T 8441, BELDEN	1.135	.096	.438	.438	.500	.235	TAI-102	TWINAX
-32	TRC-50-1	1.135	.096	.438	.438	.500	.191	TAI-189	TRIAX
-33	TRC-75-1	1.135	.096	.438	.438	.500	.217	TAI-189	TRIAX
-42	21-204, ESSEX 4463, CONSOLIDATED	1.135	.096	.438	.438	.500	.300	TAI-189	TRIAX
-43	250-4044/250-4045 293-3930, MICRODOT	1.135	.096	.438	.438	.500	.200	TAI-189	TRIAX
-45	M27500-22TE2T14 1100-66F, STANDARD	1.135	.096	.438	.438	.500	.183	TAI-102	TWINAX
-46	9860, BELDEN	1.716	.130	.625	.688	.750	.475	TAI-103	TWINAX
-47	MI7/176-00002	1.135	.096	.438	.438	.500	.164	TAI-102	TWINAX
-49	TWAC-78-1F2	1.135	.096	.438	.438	.500	.132	TAI-102	TWINAX
-54	89207, BELDEN	1.716	.130	.625	.688	.750	.323	TAI-103	TWINAX
-55	89272, BELDEN	1.135	.096	.438	.438	.500	.250	TAI-102	TWINAX
-56	GC875GC1, GRUMMAN	1.135	.096	.438	.438	.500	.191	TAI-189	TRIAX
-57	GC875GB1, GRUMMAN	1.135	.096	.438	.438	.500	.191	TAI-189	TRIAX
-58	GC875TM24H, GRUMMAN	1.135	.096	.438	.438	.500	.198	TAI-102	QUADRAX
-59	GC875LN1, GRUMMAN	1.135	.096	.438	.438	.500	.198	TAI-189	TRIAX
-60	MI7/177-00002, THERMATICS 380-10045, BOEING	1.135	.096	.438	.438	.500	.217	TAI-189	TRIAX
-64	7528A5314, RAYCHEM	1.135	.096	.438	.438	.500	.183	TAI-189	TRIAX

5. EXAMPLE OF COMPLETE MODEL NO:

PL75 T -9 BR 4

- PL75: BASIC MODEL NO
- T: POLARIZATION LETTER NONE REQD FOR STD POLARIZATION (SEE TABLE 3)
- -9: DASH NO (CABLE GROUP, SEE TABLE 1)
- BR: BEND RELIEF (OMIT IF NOT REQD)

4 IF BEND RELIEF SPRING REQUIRED (SEE FIG 1) ADD SUFFIX "BR" TO MODEL NUMBER (NOT AVAILABLE WITH CABLE GROUPS -8, -10, -11, -12, -13, -13A, -14, -46, & -54)

3 CLAMP NUT OMITTED

2. CONCENTRIC TWINAX/TRIAX 3-LUG TRB CABLE PLUG

1. PLATING: 310-0002-XX — PER TFS-1 OR -U FOR UNPLATED

NOTES: UNLESS OTHERWISE SPECIFIED.

DATA CONTAINED IN THIS DOCUMENT IS PROPRIETARY TO EMERSON CONNECTIVITY SOLUTIONS AND SHALL NOT BE DISCLOSED, COPIED OR USED FOR PROCUMENT OR MANUFACTURE WITHOUT EXPRESS WRITTEN PERMISSION

REVISIONS

REV	DESCRIPTIONS	DATE	APPROVED
BS	ECO 52461	6/18/10	C.MONAHAN

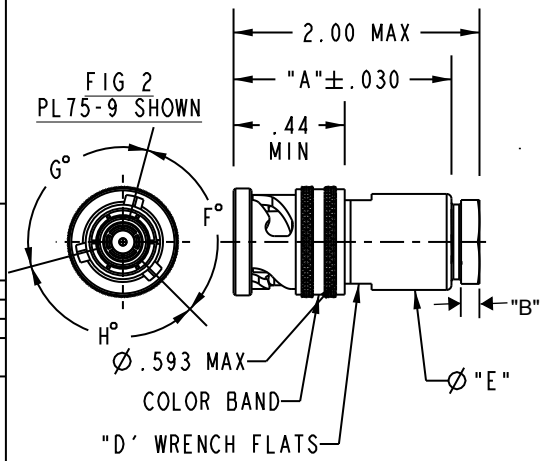

FIG 2
PL75-9 SHOWN

TABLE 3

KEYING LETTER	F DEGREES	G DEGREES	H DEGREES	COLOR BAND
NONE	120°	120°	120°	NONE
T	100°	150°	110°	RED
U	120°	130°	110°	ORANGE
V	115°	130°	115°	YELLOW
W	125°	110°	125°	GREEN
X	130°	100°	130°	BLUE
Y	110°	140°	110°	VIOLET
Z	100°	160°	100°	GRAY
S	135°	135°	90°	WHITE

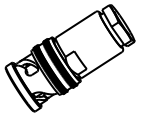

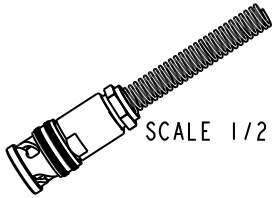

SCALE 1/2

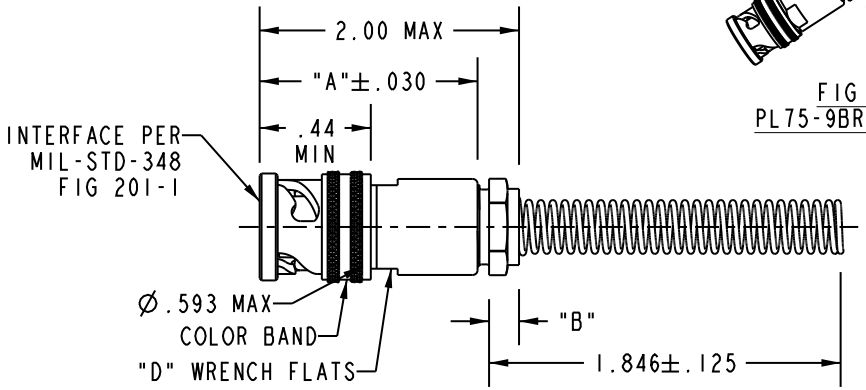

FIG 1
PL75-9BR SHOWN 4

INTERPRET DRAWING PER MIL-STD-100. DIMENSIONS ARE IN INCHES AND INCLUDE FINISH THICKNESS UNLESS OTHERWISE SPECIFIED.	TOL: UNLESS SPECIFIED. .XX ± .02 .XXX ± .010 ANGLE ± 1°	cinch CONNECTIVITY SOLUTIONS a bel group	
DRN M. JOHNSON 3-18-09	MATERIAL:	TITLE: PL75/T/U/V/W/X/Y/Z/S/BR	
CHK LM 4/1/09			
QUALITY	FINISH:		
MANUF		SIZE A · CAGE CODE 14949 · DRAWING NO. 310-0002 · REV. BS	
APPROVED			
PROJE FILE NO. 310-0002	DO NOT SCALE DWG	SCALE 1/1 · DATE 1-12-66 · SHEET 1 OF 2	

N/A
BLANK LENGTH (REF. ONLY)
N/A
SURFACE AREA

Please read our datasheet & drawing disclaimer here.