DWG NO.	SH	CUSTOMER	CUSTOMER P/N	CUST. REV
3-0055	1			

DATA CONTAINED IN THIS DOCUMENT IS PROPRIETARY TO EMERSON CONNECTIVITY SOLUTIONS AND SHALL NOT BE DISCLOSED, COPIED OR USED FOR PROCUMENT OR MANUFACTURE WITHOUT EXPRESS WRITTEN PERMISSION

REVISIONS

REV	DESCRIPTIONS	DATE	APPROVED
L	ECO 52611	9/28/10	T.KOHLER

DASH NO	CABLES ACCOMMODATED	ASSEMBLE PER	A DIA
-7	TRC-50-2/TRC-75-2	TA1-189	.274
-9	TWC-78-2/TWC-124-2	TA1-102	.285
-23	250-3884, MICROOOT	TA1-189	.183
-24	202-3934, MICROOOT	TA1-102	.191
-24A	9530A5117, RAYCHEM	TA1-189	.200
-25	GEE1A, GERMANY	TA1-102	.285
-25A	5021H5331, RAYCHEM	TA1-189	.285
-26	702BA5518, RAYCHEM		.183
-27	202-3927, MICRROOOT	TA1-102	.145
-29	TWC-78-1/TWC-124-1A		.191
-30	761A,W.E.CO/8441,BELDEN		.235
-32	TRC-50-1	TA1-189	.191
-33	TRC-75-1		.217
-42	21-204, ESSEX 4463, CONSOLIDATED		.300
-43	250-4044/250-4045 293-3930, MICROOOT		.200
-45	M27500-22TE2T14 1100-66F, STANDARD	TA1-102	.183
-47	M17/176-00002		.164
-49	TWAC-78-1F2		.132
-55	89272, BELDEN		.250
-56	GC875GC1, GRUMMAN	TA1-189	.191
-57	GC875GB1, GRUMMAN		
-58	GC875TM24H, GRUMMAN	TA1-102	.198
-59	GC875LN1, GRUMMAN	TA1-189	
-60	M17/177, THERMATICS 380-10045, BOEING		.217
-64	7528A5314, RAYCHEM		.183

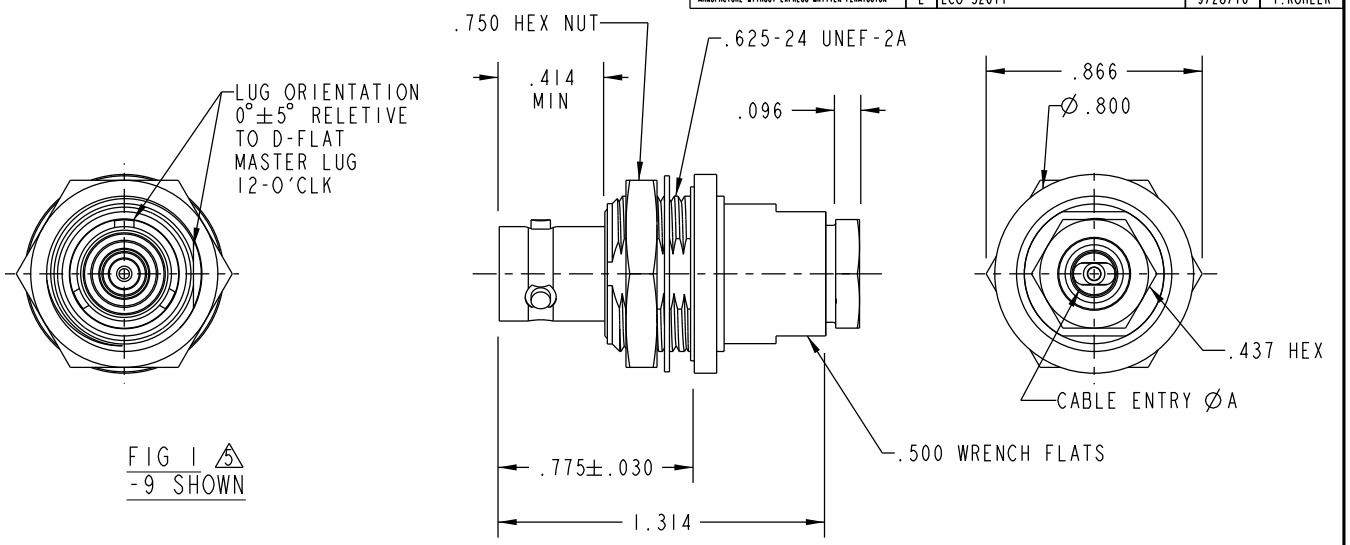

FIG 1 ⚠5
-9 SHOWN

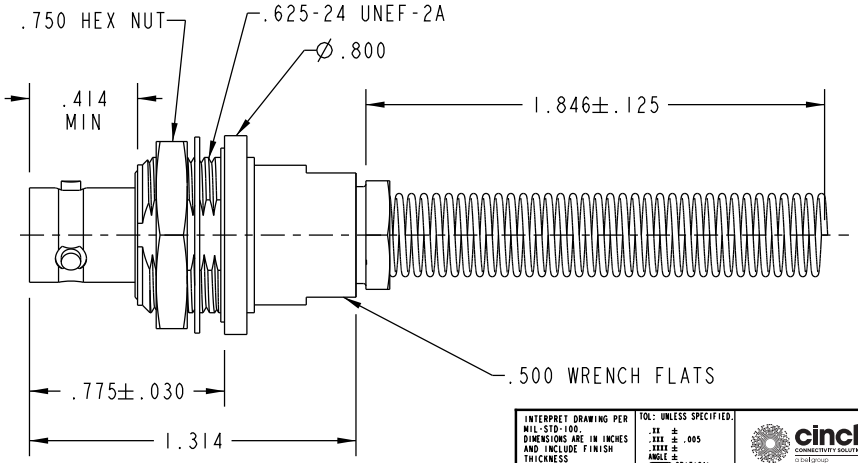

FIG 2 ⚠5
-9 SHOWN

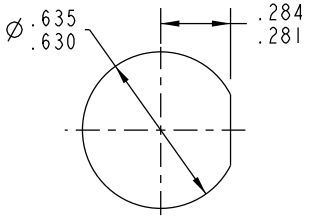

RECOMMENDED
PANEL CUTOUT

⚠5 IF BEND RELIEF SPRING REQUIRED (FIG 2)

4. CONCENTRIC TWINAX/TRIAX TRB BULKHEAD MOUNT CABLE RECEPTACLE

3. MAX PANEL THK .140

2. FINISH: TFS-1A (NICKEL)

1. ALL DIM ARE IN INCHES

NOTES: UNLESS OTHERWISE SPECIFIED.

INTERPRET DRAWING PER MIL-STD-100. DIMENSIONS ARE IN INCHES AND INCLUDE FINISH THICKNESS UNLESS OTHERWISE SPECIFIED.

TOL: UNLESS SPECIFIED. .XX ± .XXX ± .005 .XXXX ± ANGLE ± CRITICAL

DRN J.CRAWFORD 10/19/10
CHK C.WALLACE 10/19/10
QUALITY
MANUF
APPROVED
PROVE FILE NO. 3-0055

MATERIAL:
FINISH:
DO NOT SCALE DWG

N/A
BLANK LENGTH (REF. ONLY)
N/A
SURFACE AREA

cinch CONNECTIVITY SOLUTIONS a tdi group

Cinch Connectivity Solutions
299 Johnson Ave. Ste. 100
Waseca, MN 56093
1-800-247-8256

TITLE: BJ74/BJ74BR

SIZE	CAGE CODE	DRAWING NO.	REV.
B	14949	3-0055	L

SCALE 2/1 | DATE | SHEET 1 OF 2

Please read our datasheet & drawing disclaimer here.