MODEL NO.	PACKAGING
147-0701-211	ONE PCS PER BAG

REV	ECO	DATE
001	ECO-17-0032	11/28/2017
002	ECO-18-0020	08/21/2018
003	ECO-19-0022	06/27/2019

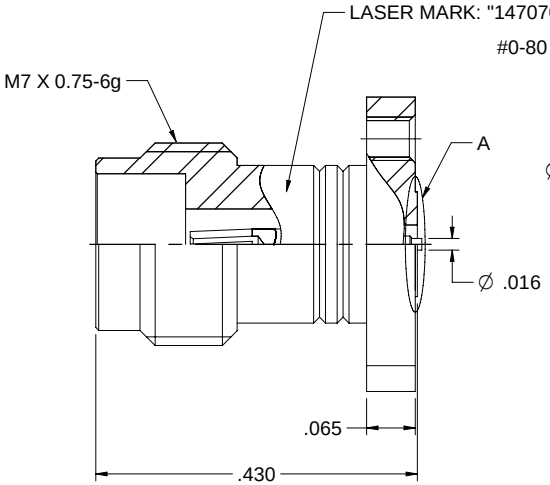

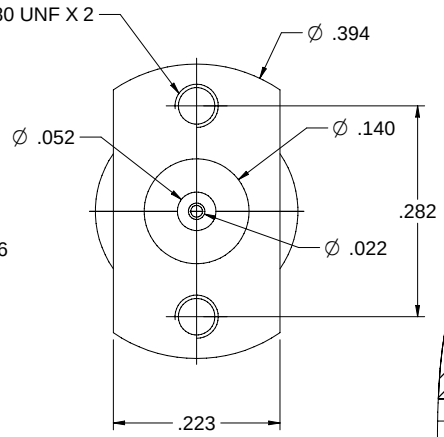

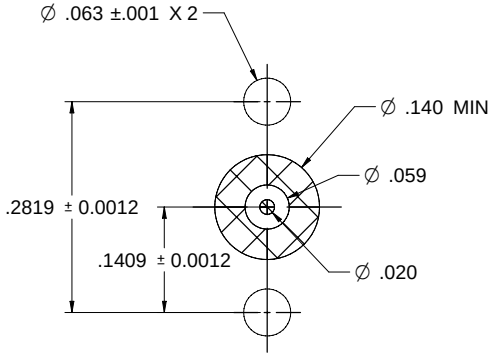

RECOMMENDED MOUNTING PATTEN

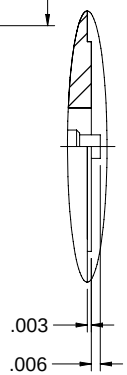

A DETAIL (10/1)

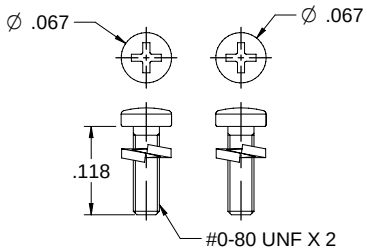

SCALE (3/1)

1. BOARD THICKNESS: 1.57-2.79mm

NOTES: UNLESS OTHERWISE SPECIFIED

1. MATERIAL & FINISH:
   1.1 BODY: PASSIVATED STAINLESS STEEL
   1.2 CONTACT PIN : GOLD PLATED BERYLLIUM COPPER
   1.3 INSULATOR: PTFE WHITE
   1.4 WASHER: STAINLESS STEEL
   1.5 BOLT: SUS302

2. ELECTRICAL:
   2.1 IMPEDANCE: 50 OHMS
   2.2 FREQUENCY RANGE: DC-50 GHz
   2.3 INSULATION RESISTANCE: 5000 MOHM MIN
   2.4 CONTACT RESISTANCE:
      2.4.1 CENTER CONTACT: 4 MILLIOHM MAX
      2.4.2 OUTER CONTACT: 2.5 MILLIOHM MAX
   2.5 DIELECTRIC WITHSTANDING VOLTAGE: 500VRMS MIN
   2.6 VOLTAGE STANDING WAVE RATION(VSWR): 1.55 MAX

3. MECHANICAL:
   3.1 ENGAGEMENT/ DISENGAGEMENT FORCE: 0.23 NM MAX
   3.2 CONTACT RETENTION: 12 N MIN
   3.3 DURABILITY: 500 CYCLES MIN

4. ENVIRONMENT:
   4.1 THERMAL SHOCK: MIL-STD-202, METHOD 107, CONDITION B.
   4.2 OPERATING TEMPERATURE: -65 TO 165°C
   4.3 SHOCK: MIL-STD-202, METHOD 213, CONDITION I
   4.4 VIBRATION: MIL-STD-202, METHOD 204, CONDITION D
   4.5 MOISTURE RESISTANCE: MIL-STD-202, METHOD 106

cinch connectivity solutions

This PROPRIETARY Document is property of Cinch Connectivity Solutions. Unauthorized use, reproduction and/or disclosure of information contained herein is prohibited. Violation of this IP notice may be prosecuted to the fullest extent of the law.
INTERPRETATION PER ASME Y14.5-2009

Model No. 147-0701-211/220

RoHS2 ☑ 2011/65/EU

UNLESS OTHERWISE SPECIFIED WITH RoHS

.XXX ±.02
.XXXX ±.01
ANGLES ±5°

Cage Code

3RD ANGLE PROJECTION

Drawn By: Betty.Yu

Date: 08/21/2018

Johnson

Title: JACK, PCB, COMPRESSION MOUNT,2.4mm

Drawing No. 147-0701-211/220

Rev. 003

Size C

DO NOT SCALE DRAWING

Workmanship Std: NONE

Sheet 1 of 1