MODEL NO.	PACKAGING
147-0701-201	ONE PCS PER BAG

REV	ECO	DATE
001	ECO-17-0032	11/28/2017
002	ECO-18-0020	08/21/2018

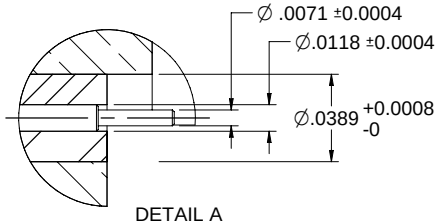

DETAIL A

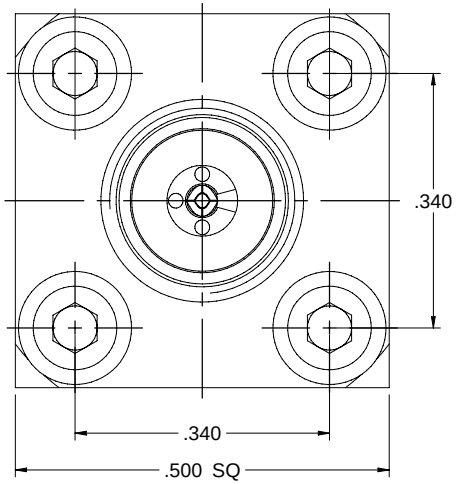

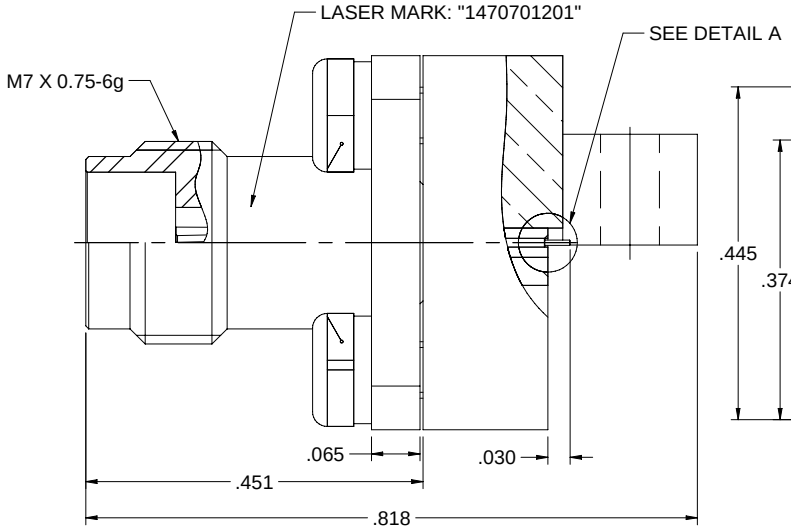

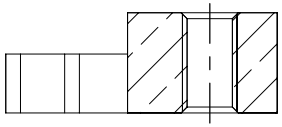

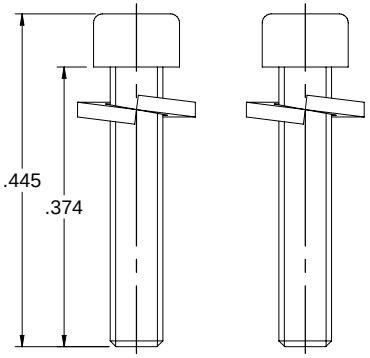

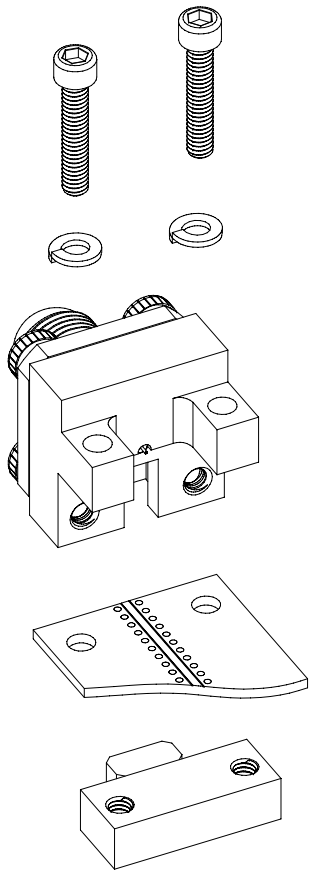

NOTES: UNLESS OTHERWISE SPECIFIED

1. MATERIAL & FINISH:
   1.1 BODY: NICKEL PLATED BRASS
   1.2 CONTACT PIN : GOLD PLATED BERYLLIUM COPPER
   1.3 INSULATOR: PTFE WHITE
   1.4 BOLT & WASHER: STAINLESS STEEL

2. ELECTRICAL:
   2.1 IMPEDANCE: 50 OHMS
   2.2 FREQUENCY RANGE: DC-50 GHz
   2.3 VOLTAGE STANDING WAVE RATIO: 1.2 MAX
   2.4 CONTACT RESISTANCE:
      2.4.1 CENTER CONTACT: 6 MILLIOHM MAX
      2.4.2 OUTER CONTACT: 2.5 MILLIOHM MAX
   2.5 DIELECTRIC WITHSTANDING VOLTAGE: 500 VRMS MIN
   2.6 INSULATOR RESISTANCE: 5000 MEGOHM MIN

3. MECHANICAL:
   3.1 ENGAGEMENT/ DISENGAGEMENT FORCE: 0.23 NM MAX
   3.2 CONTACT RETENTION: 20 N MIN
   3.3 DURABILITY (MATING): 500 CYCLES MIN
   3.4 BOARD THICKNESS: 0 - 0.11 INCH

4. ENVIRONMENT:
   4.1 THERMAL SHOCK: MIL-STD-202, METHOD 107, CONDITION B.
   4.2 OPERATING TEMPERATURE: -65 TO 165°C
   4.3 SHOCK: MIL-STD-202, METHOD 213, CONDITION I
   4.4 VIBRATION: MIL-STD-202, METHOD 204, CONDITION D
   4.5 MOISTURE RESISTANCE: MIL-STD-202, METHOD 106

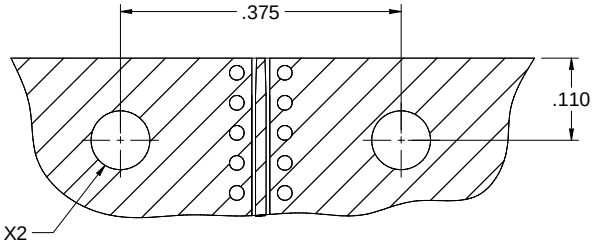

PCB LAYOUT

cinch connectivity solutions	Model No. 147-0701-201		Johnson
This PROPRIETARY Document is the property of Cinch Connectivity Solutions. It is confidential in nature and must not be reproduced with the close permission of Cinch Connectivity Solutions or copied or used without written authorization from Cinch upon demand. INTERPRET DRAWING IN ACCORDANCE WITH ASME Y14.5-2009	RoHS2 2011/65/EU	Cage Code	Title: END LAUNCH JACK, SCREW-ON TYPE,2.4mm
	UNLESS OTHERWISE SPECIFIED	3RD ANGLE PROJECTION	Drawing No. 147-0701-201 — Rev. 002
	.XXX ±.02 .XXXX ±.01 ANGLES ±5°	Drawn by: Betty.Yu	
		Date: 08/21/2018	Size C — DO NOT SCALE DRAWING — Workmanship Std: NONE — Sheet 1 of 1