MODEL NO.	PACKAGING
134-1000-022	ONE PCS PER BAG

REV	ECO	DATE
001	ECO-17-0033	12/18/2017
002	ECO-18-0020	08/21/2018

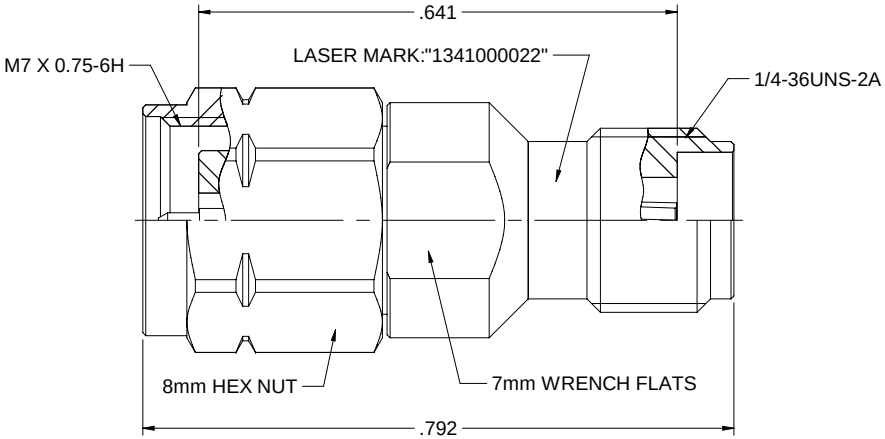

NOTES: UNLESS OTHERWISE SPECIFIED

1. MATERIAL & FINISH:
   1.1 BODY & SHELL: PASSIVATED STAINLESS STEEL
   1.2 CONTACT PIN : GOLD PLATED BERYLLIUM COPPER
   1.3 INSULATOR: ULTEM 1000 AMBER
   1.4 GASKET: SILICONE RED
   1.5 C RING: BERYLLIUM COPPER

2. ELECTRICAL:
   2.1 IMPEDANCE: 50 OHMS
   2.2 FREQUENCY RANGE: DC-46.5 GHz
   2.3 DIELECTRIC WITHSTANDING VOLTAGE: 500 VRMS MIN
   2.4 VOLTAGE STANDING WAVE RATIO: DC- 4 GHZ: 1.05 MAX
   4 - 20 GHZ: 1.08 MAX
   20 - 46.5GHZ: 1.15 MAX
   2.5 CONTACT RESISTANCE: CENTER CONTACT: 4 MILLIOHMS MAX
   OUTER CONTACT: 2.5 MILLIOHMS MAX
   2.6 INSULATION RESISTANCE: 5000 MOHM MIN

3. MECHANICAL:
   3.1 ENGAGEMENT/ DISENGAGEMENT FORCE: 0.23 NM MAX
   3.2 COUPLING PROOF TORQUE: 1.65NM MIN (1.85MM)
   3.3 COUPLING NUT RETENTION FORCE: 267 N MIN
   3.4 CONTACT RETENTION: 20 N MIN
   3.5 DURABILITY: 500 CYCLES MIN

4. ENVIRONMENT:
   4.1 THERMAL SHOCK: MIL-STD-202, METHOD 107, CONDITION B.
   4.2 OPERATING TEMPERATURE: -65 TO 165°C
   4.3 SHOCK: MIL-STD-202, METHOD 213, CONDITION I
   4.4 VIBRATION: MIL-STD-202, METHOD 204, CONDITION D
   4.5 MOISTURE RESISTANCE: MIL-STD-202, METHOD 106

cinch	Model No. 134-1000-022		Johnson
	RoHS2 ☑ 2011/65/EU	Cage Code	Title: ADAPTER ASSEMBLY,1.85mm PLUG TO 2.92mm(SMK) JACK
		3RD ANGLE PROJECTION	Drawing No. 134-1000-022 — Rev. 002
	.XXX ±.02 .XXXX ±.01 ANGLES ±5°	Drawn By: Betty.Yu	
		Date: 08/21/2018	Size C — DO NOT SCALE DRAWING — Workmanship Std: NONE — Sheet 1 of 1

This PROPRIETARY Document is property of Cinch Connectivity Solutions. Unauthorized use, disclosure, or reproduction is prohibited. By accepting this document, the recipient is not authorized to use it for any purpose other than the purpose for which it was given to him/her.
INTERPRETATION OF DRAWINGS IN ACCORDANCE WITH ASME Y14.5-1994.